HUACHENG

GC-R6-S
Hardware User Manual

深圳市华成工业控制股份有限公司

Shenzhen Huacheng Industrial Control Co.,Ltd.

Contents

1 Introduction

1.1 Target group

This document is intended for users who have knowledge of:

- Expertise in electrical technology
- Technical knowledge of robot controllers

1.2 Introduction

The control cabinet is an integrated control cabinet with 6-axis robots, which has the characteristics of light structure, rich functions, easy installation and convenient expansion.
This manual introduces the basic specifications, installation and wiring, common fault diagnosis and countermeasures, and service and maintenance of the GC-R6-S .

1.3 Manual Access

This manual is not shipped with the product, and if you need to obtain an electronic PDF file, you can obtain it in the following ways:
Log in to the official website of Huacheng Industrial Control (www.hc-system.com), "Service and Support - Data Download", search for keywords and download.

1.4 Safety Precautions

Security Notice

1. When installing, operating, and maintaining the product, please read and follow the safety precautions first.
2. To ensure the safety of persons and equipment, please follow all safety precautions described on the product identification and in the manual when installing, operating, and maintaining the product.
3. The "Caution", "Warning" and "Danger" items in the manual do not represent all safety precautions to be observed, and are only intended to supplement all safety precautions.
4. This product should be used in an environment that

meets the requirements of the design specifications, otherwise it may cause failure, and abnormal functions or component damage caused by failure to comply with relevant regulations are not within the scope of product quality assurance.

5. Our company will not assume any legal responsibility for personal safety accidents and property losses caused by illegal operation of products.

Definition of security level

- dangerous Indicates that failure to do so results in death or serious bodily injury.
- warn Indicates that failure to do so could result in death or serious bodily injury.
- note Indicates that failure to operate as specified may result in minor bodily injury or damage to the device.

Safety Precautions

Unpacking and acceptance
dangerous ● Before unpacking, please check whether the outer packaging of the equipment is in good condition, whether it is damaged, soaked, damp, deformed, etc. ● Please open the package in hierarchical order, and it is strictly forbidden to knock violently! ● When unpacking, please check whether the surface of the equipment and accessories is damaged, rusted, bruised, etc. ● After unpacking, please carefully check the packing list to check whether the number of equipment and accessories and the information are complete.
● When unpacking, it is found that the product and product accessories are damaged, rusted, traces of use and other problems, please do not install it! ● When you find that the inside of the product is flooded, partially missing, or some parts are damaged when you open the box, do not

warn

install it!

- Please carefully check the packing list, and if you find that the packing list does not match the product name, do not install it!

Storage and transportation

note

- Please store and transport the product according to the storage and transportation conditions, storage temperature、The humidity meets the requirements.
- Avoid storage and transportation in places such as water splashing and rain， direct sunlight， strong electric field， strong magnetic field， strong vibration, etc.
- Avoid storing the product for more than 3 months, and when the storage time is too long, please carry out tighter protection and necessary inspection.
- It is strictly forbidden to transport this product in mixed packages with equipment or items that may affect or damage this product.

warn

- Be sure to use professional loading and unloading equipment to move large or heavy equipment and products!
- When handling the product with bare hands, be sure to grasp the product shell firmly to avoid the product falling, otherwise there is a risk of injury!
- When handling the product, please be sure to lift it gently, pay attention to the objects under your feet at all times, and prevent tripping or falling, otherwise there is a risk of injury or product damage!
- When the equipment is lifted by a lifting tool, it is forbidden for personnel to stand or stay under the equipment.

At the time of installation

warn

- Please be sure to read the product's instruction manual and safety precautions carefully before installation!

- It is strictly forbidden to modify this product
- It is strictly forbidden to screw the fixing bolts and red marked bolts of product parts and components!
- Do not install this product in places with strong electric fields or strong magnetic interference!
- When this product is installed in the cabinet or terminal equipment, the cabinet or terminal equipment needs to provide corresponding fireproof shells, electrical protective shells and mechanical protective shells and other protective devices, and the protection level shall meet the requirements of relevant IEC standards and local laws and regulations.

dangerous

- It is strictly forbidden for non-professionals to install, wiring, maintain, inspect or replace parts!
- The installation, wiring, maintenance, inspection, or replacement of components of this product can only be carried out by professionals who have been trained in electrical equipment and have sufficient knowledge of electrical equipment.
- The installer must be familiar with the product installation requirements and related technical information.
- When it is necessary to install equipment with strong electromagnetic interference such as transformers, please install shielding protection devices to avoid malfunction of this product!

When wiring

dangerous

- It is strictly forbidden for non-professionals to install, wiring, maintain, inspect or replace parts!
- Do not wiring when the power is on, otherwise there will be a risk of electric shock.
- Before wiring, cut off the power to all devices. If there is a residual voltage in the capacitor of the device after the power is cut off, please wait for at least 10 minutes before wiring.
- Be sure to ensure that the equipment and product are well grounded, otherwise there will be a risk of electric shock.

- Please follow the steps specified in the ESD precautions and wear an electrostatic bracelet for wiring and other operations to avoid damaging the equipment or the internal circuits of the product.

dangerous

- It is strictly forbidden to connect the input power supply to the output of the device or product, otherwise it will cause damage to the equipment or even cause a fire.
- When the drive equipment is connected to the motor, please ensure that the phase sequence of the drive and the motor terminal is accurate and consistent to avoid causing the motor to rotate in the opposite direction.
- The cable used in the wiring must meet the requirements of the corresponding wire diameter and shielding, and the shielding layer of the shielded cable needs to be reliably grounded at one end!
- Once wiring is complete, make sure there are no fallen screws or exposed cables inside the device and product.

When powered on

dangerous

- Before powering on, please confirm that the device and product are well installed, the wiring is secure, and the motor unit is allowed to restart.
- Before powering on, please confirm that the power supply meets the requirements of the device to avoid damage to the device or cause fire!
- When powering on, the mechanical device of the device or product may move suddenly, please take care to stay away from the mechanical device.
- After powering on, do not open the equipment cabinet door or product protection cover, otherwise there is a risk of electric shock!
- It is strictly forbidden to touch any terminal of the equipment in the energized state, otherwise there is a risk of electric shock!
- It is strictly forbidden to disassemble any device or part of the equipment and product in the energized state, otherwise there is a risk of electric shock!

Runtime

dangerous

- It is strictly forbidden to touch any terminal blocks of the equipment

in the operating state, otherwise there is a risk of electric shock!

- It is strictly forbidden to disassemble any device or part of the equipment and product in the operating state, otherwise there is a risk of electric shock!
- It is strictly forbidden to touch the device housing, fan or resistor to test the temperature, otherwise it may cause burns!
- It is strictly forbidden for non-professional technicians to detect the signal during operation, otherwise it may cause personal injury or equipment damage!

dangerous

- During operation, avoid other items or metal objects falling into the equipment, otherwise the equipment will be damaged!
- Do not use the contactor on-off method to control the start and stop of the equipment, otherwise the equipment will be damaged!

At the time of maintenance

dangerous

- It is strictly forbidden for non-professionals to install, wiring, maintain, inspect or replace parts!
- It is strictly forbidden to maintain the equipment in the energized state, otherwise there is a risk of electric shock!
- Once you have cut off the power to all your devices, at least wait10min and then carry out equipment maintenance and other operations.

dangerous

- Please carry out daily and regular inspection and maintenance of equipment and products in accordance with the equipment maintenance and maintenance requirements, and make maintenance records.

At the time of repair

dangerous

- It is strictly forbidden for non-professionals to install, wiring, maintain, inspect or replace parts!
- It is strictly forbidden to repair the equipment in the energized state,

otherwise there is a risk of electric shock!

- After disconnecting the power to all devices, wait at least 10 minutes before performing operations such as device inspection and maintenance.

dangerous

- Please follow the product warranty agreement for the equipment warranty.
- When the equipment fails or is damaged, professionals will troubleshoot and repair the equipment and products in accordance with the maintenance guidance, and make maintenance records.
- Please follow the product wearing parts replacement instructions for replacement.
- Do not continue to use a machine that is already damaged, as this will cause damage to a larger program.
- After replacing the device, be sure to check the wiring and set the parameters of the device again.

At the end of life

dangerous

- Please follow the relevant national regulations and standards for equipment、Obsolescence of the product、so as not to cause property damage or casualties!
- Scrapped equipment and products should be disposed of and recycled in accordance with industrial waste disposal standards to avoid environmental pollution.

2. Product information

2.1 Information and dimensions of each component

2.1.1 Component Information

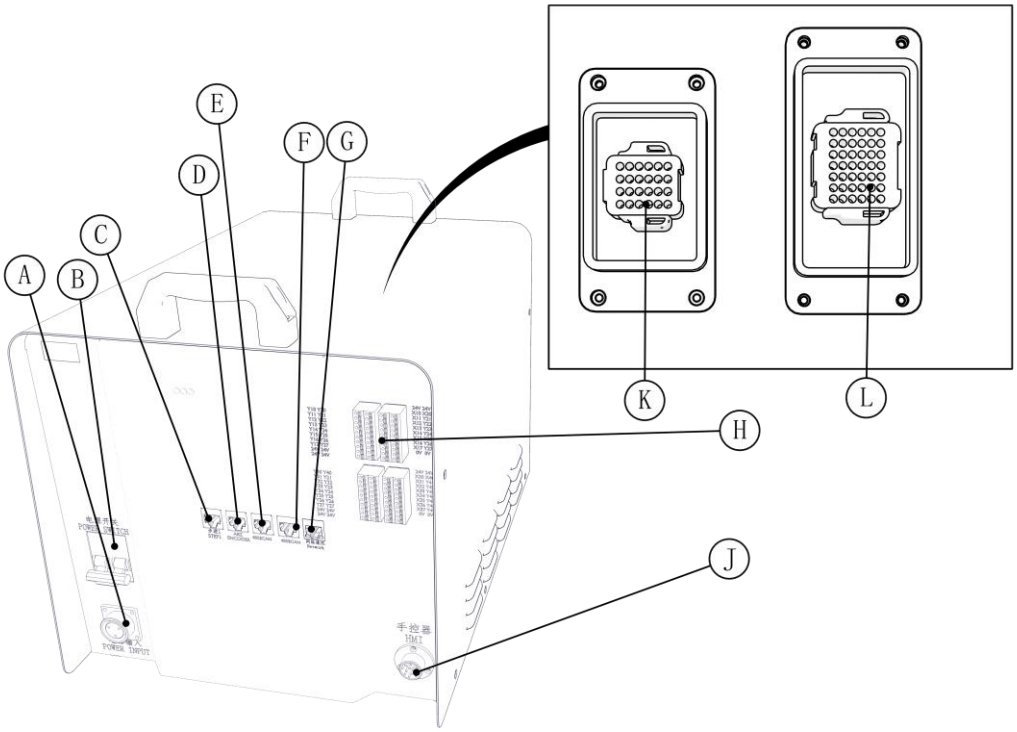

Part information

	name	Feature description
A	Power input	External 220VAC power supply input interface
B	Power input switch	Power-on switch for control cabinets
C	Step 1 interface	STEP1
D	ABZ encoder interface	ENCODER
E	Can & RS485 interface	
F	Can & RS485 interface	
G	Network communication port	Ethernet communication network port
H	External I/O port	32 out and 32 in IO ports
J	Hand control interface	Dedicated interface for handheld teach pendants
K	Encoder interface	Motor encoder data feedback interface
L	Power line interface	Motor power line and brake line

2.1.2 Dimensions

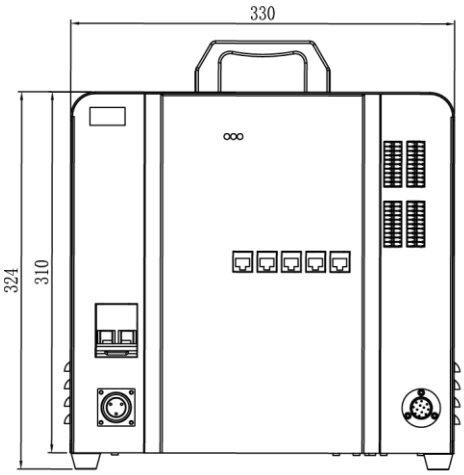

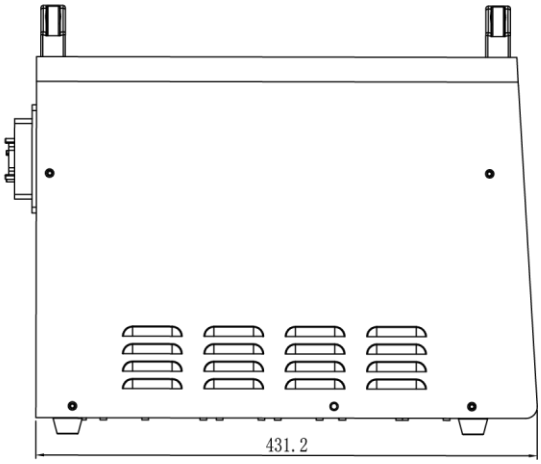

2.2 Technical Specifications

project	description	
Robot movement mode	Joint movement, linear movement	
Program storage space	Maximum number of points: 9999 points Number of multitasks: 1 main program and 16 sub-programs are supported	
IO	Input: 32 (standard) Output: 32 (standard)	
Ethernet	1 channel, speed: 100Mbps	
CAN	1 way	
RS-485	1 channel, protocol: Modbus-RTU	
extend	IO module	4 pcs
	Analog Module	1 pc
External shaft	2 axes, expandable via EtherCAT interface	
volume	408.6x276.2x368mm (L*W*H).	

project	description	
The weight of the whole machine	19kg	
The top of the cabinet is load-bearing	-	
The power module outputs the maximum power	60A	
Input voltage range	Single-phase AC 200~240V, 50~60HZ	
Input current range	25A	
noise	60dB	
Ingress protection	IP20	
Use ambient temperature	5~40℃	
elevation	1000 meters	

illustrate

The USB flash drive format must be in FAT32 format to be recognized.

3. Environment & Installation

3.1 Handling

Preparation for handling: gloves, anti-smashing shoes.

note

Note: Please wear anti-smashing shoes and gloves for handling.

The porter can carry it with both hands and with his bare hands

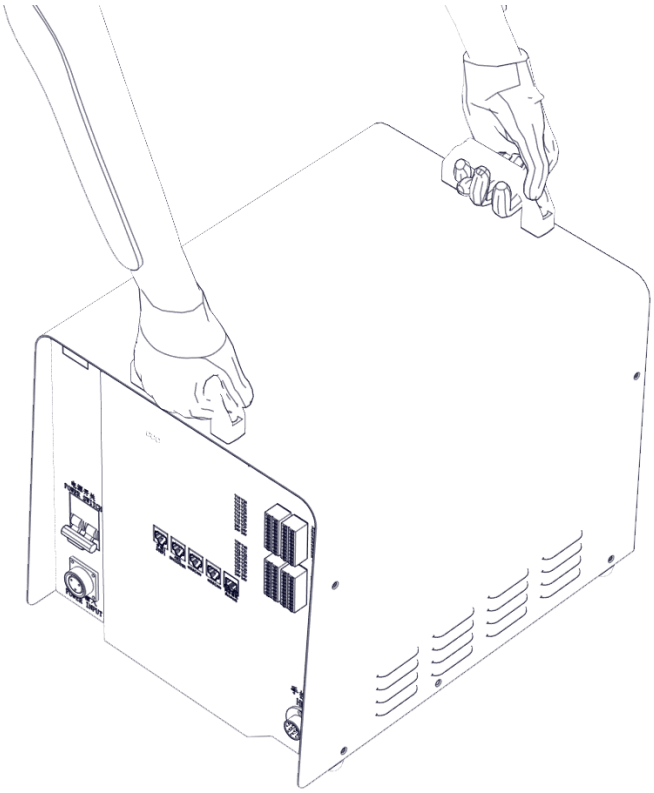

Please pay attention to grasp and carry it after handling to avoid the control cabinet slipping and damage.

3.2 Installation

3.2.1 Environmental and space requirements

Please install the robot system in an environment that meets the following conditions so that the performance of the machine can be used safely and while the performance of the machine is maintained.

- Installed indoors.
- Do not use this product near corrosive or flammable gases such as hydrogen sulfide, chlorine, ammonia, sulfur, chlorinated gases, acids, alkalis, salts, etc., or combustibles.
- When using it in places where there is grinding fluid, oil mist, iron powder, cutting, etc., please take protective measures.
- Keep away from heat sources such as stoves.
- Do not use it in a closed environment, which can easily lead to high temperature of the electric control cabinet and shorten the service life.
- Avoid sun exposure.
- Avoid loading in places that contain salt, moisture and other places that are prone to rust.

- It does not transmit shock, vibration, etc.
- There are no electrical interference sources such as large inverters, high-power high-frequency generators, large contactors, welding machines, etc. nearby.

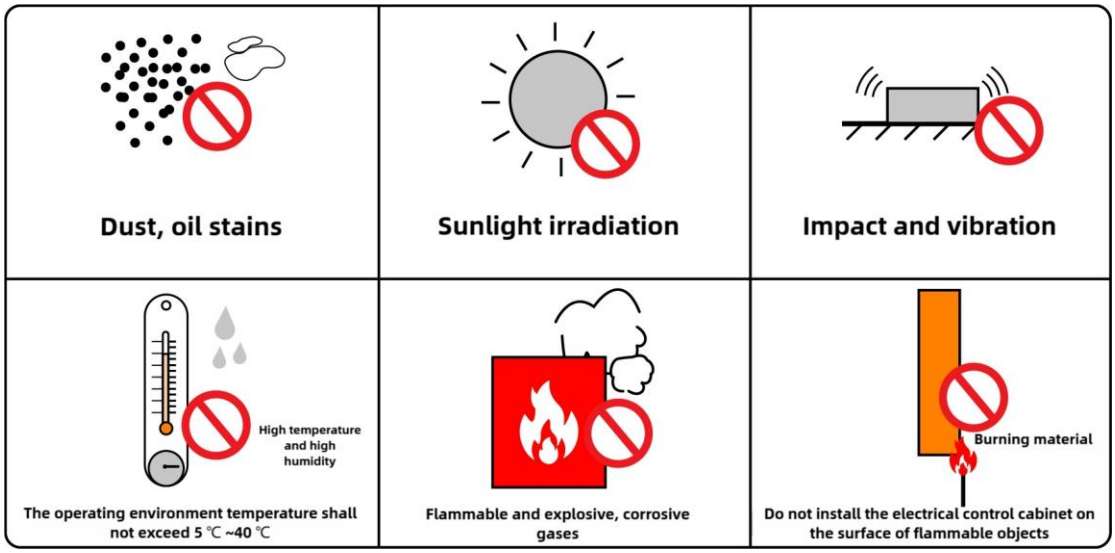

project	request
The temperature and humidity of the use environment	Temperature: 5~40° C Humidity: 20%~95%RH(30° C) (no condensation)
Store at temperature and humidity	Temperature: 5° C ~40° C Humidity: ≤95%RH (30° C)
Transportation temperature and humidity	Temperature: 25° C ~70° C Humidity: ≤95%RH(40° C)
vibration	Sinusoidal vibration: in accordance with the "JB/T 88961999 Industrial Robot Acceptance Rules", the vibration displacement of 5~25Hz is 0.75mm, the vibration displacement of 25~55Hz is 0.15mm, and each resonance point continues to vibrate for 3min; Random vibration: in accordance with ISTA 1H standard, the vibration acceleration of 4~100Hz is 0.01g2/Hz, and the vibration acceleration of 200Hz is 0.001g2/Hz; Grms=1.14g, bare metal X/Y/Z 30min per axial vibration

project	request
impact	The maximum impact must not exceed 15 g of acceleration and the duration shall not exceed 11 ms
Ingress protection	IP20
elevation	1000m and below

The installation space requirements are shown in the figure below, and sufficient heat dissipation space should be ensured.

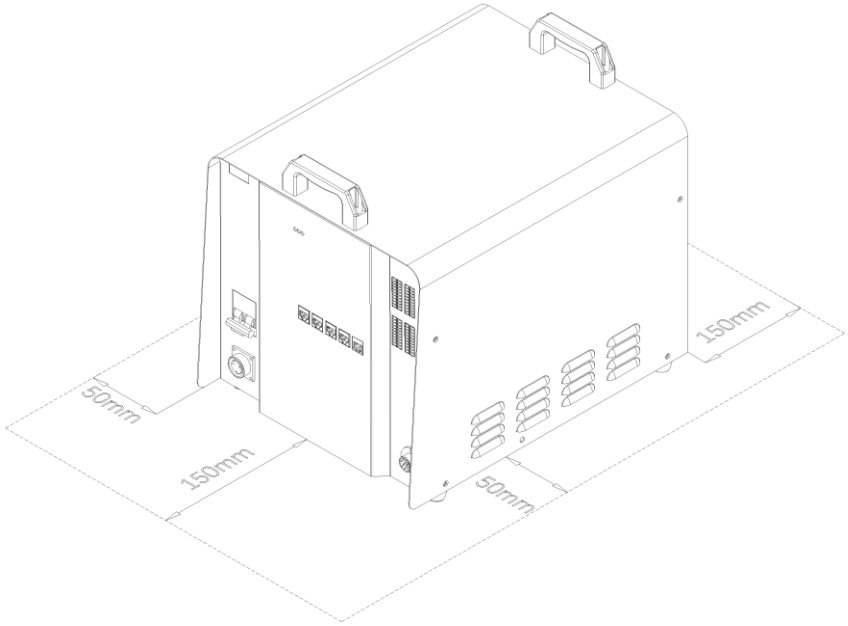

2.2.3 Horizontal installation guidance

In the standard installation scenario, the table top should be placed stably and the height from the ground should be between 0.6m and 1.9m. The table surface is required to be flat, not inclined or deformed.

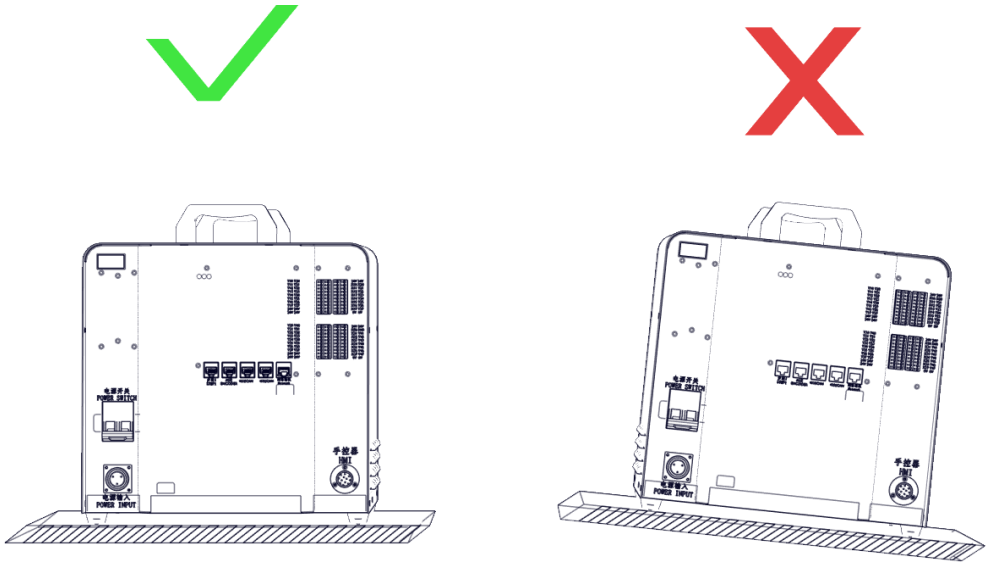

4 wiring

4.1 Wiring precautions

The installation, wiring, maintenance, and inspection of this product can only be carried out by professional maintenance personnel who have received training in electrical equipment and have sufficient electrical knowledge.

4.2 Connect the power supply

- It is strictly forbidden for non-professionals to carry out the operation, and it is operated by qualified personnel.
- To prevent electric shock, be sure to properly ground the controller.
- Be sure to use a plug or disconnected device that meets local safety standards for the cable for power connection, and do not connect directly to the factory power supply.
- Perform grounding work after disconnecting the power supply to the controller.
- This product uses a 220VAC power supply, please make the power cord according to the following diagram and wire it correctly.

The customer-selected cable needs to meet the corresponding safety specifications, and the cable is 3 cores, with a cross-sectional area of ⩾ 1.5mm2. Recommended external power supply circuit breaker specifications: rated current⩾ 16A, trip curve is C-curve.

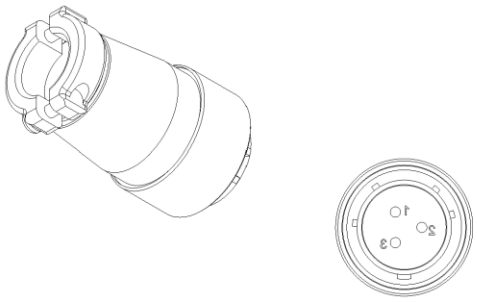

Power cord definition	
Line sequence	definition
1	L
2	N
3	PE

Wiring Steps:

Step 1: Unscrew the screws on the side of the aviation plug, LS2.0 flathead screwdriver is recommended

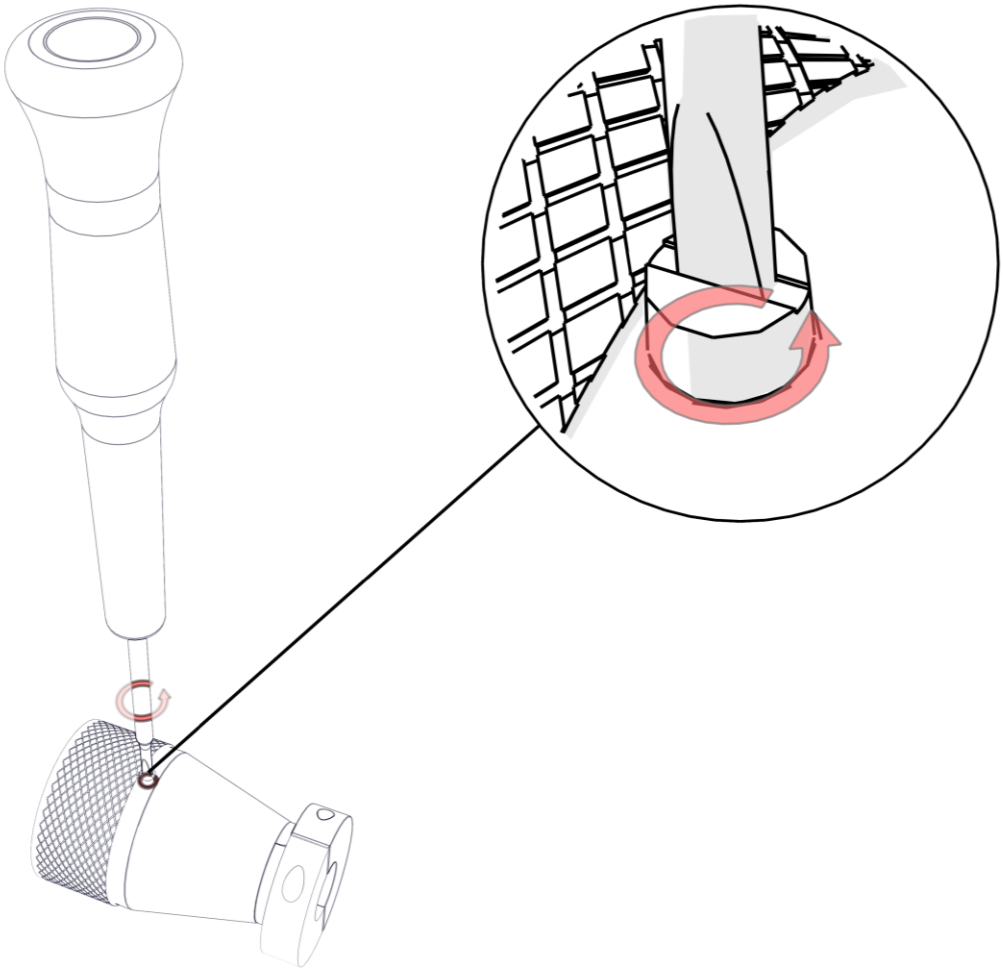

Step 2: Rotate

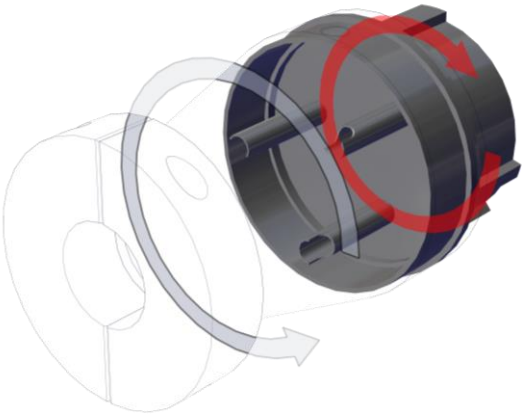

Step 3: After removing it, thread the thread and weld it back on, and put it back on

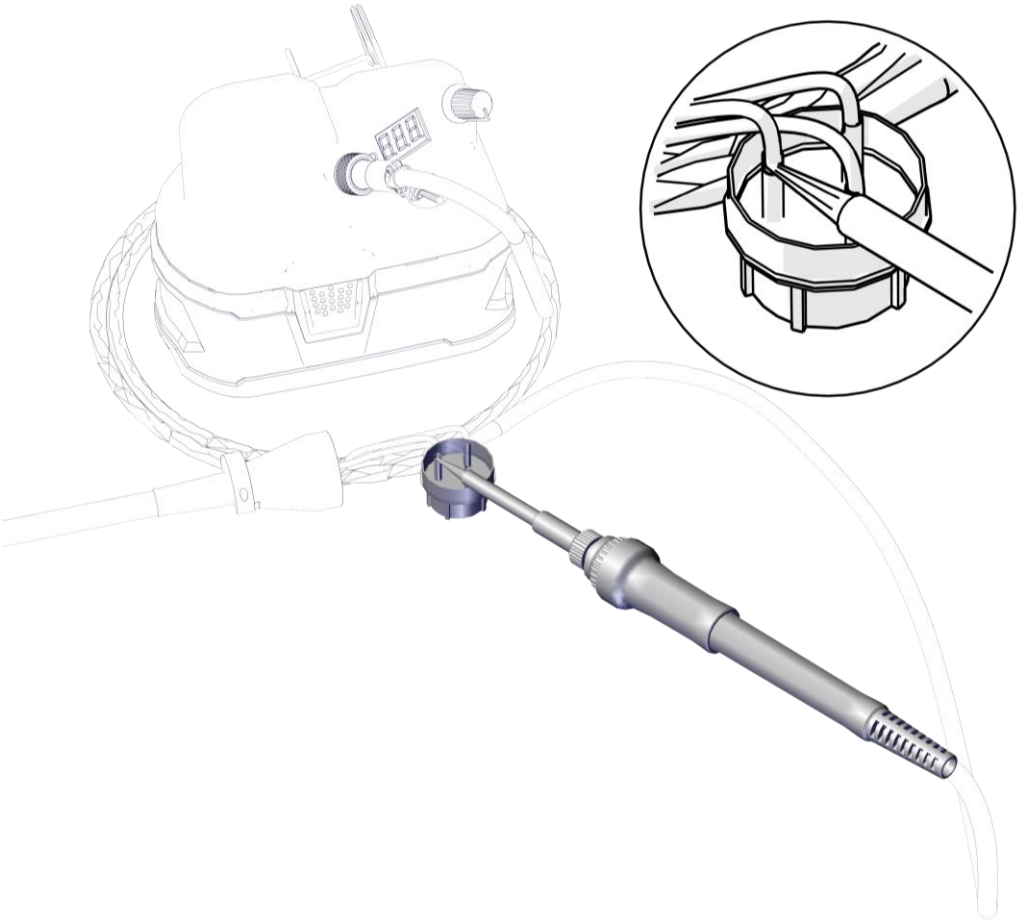

4.3 Connect the teach pendant

4.4 Interface Definition

4.4.1 Definition of the teaching pendant plug-in interface

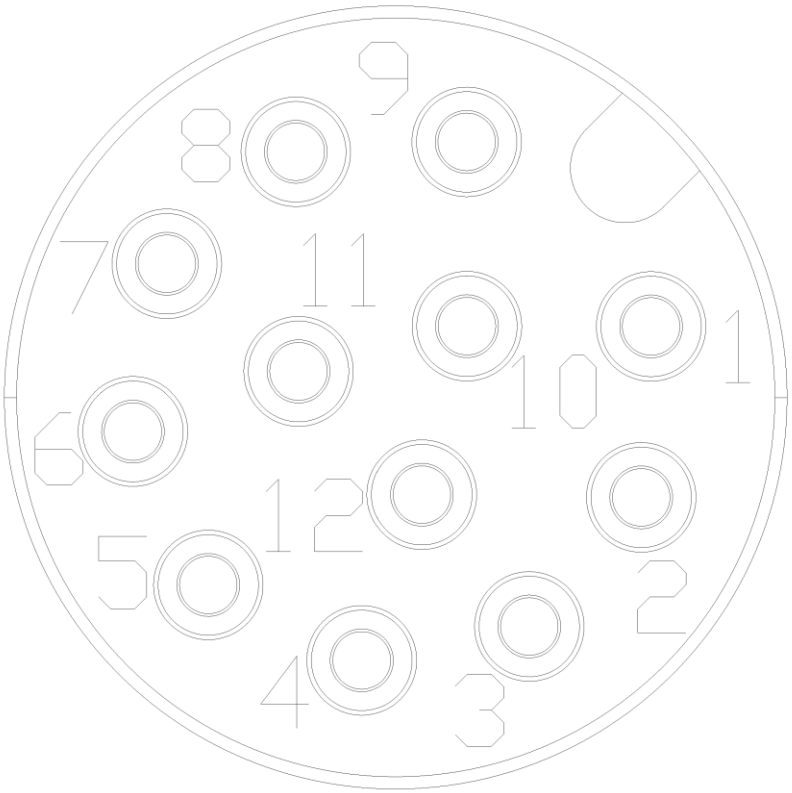

1	2	3	4	5	6	7	8	9	10	11	12
24V	24V	0V	0V	24V	Emergency stop	Emergency stop	Emergency stop on the public end	R-	T-	R+	T+

4.4.2 Power line definition/encoder line definition

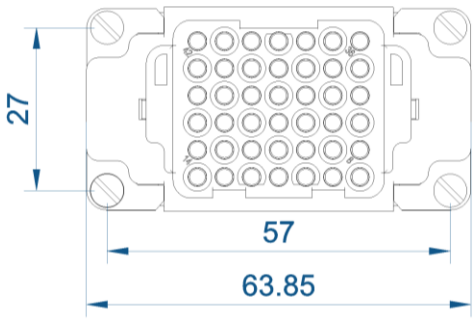

HDD-042-MC

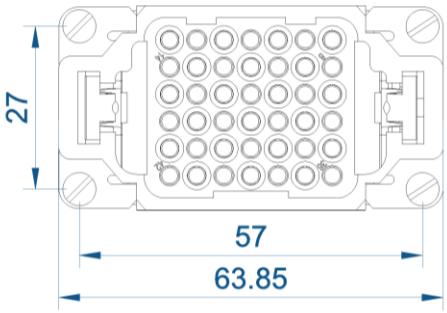

HDD-042-FC

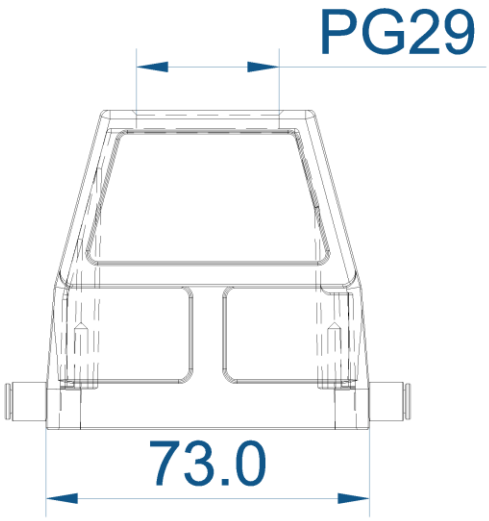

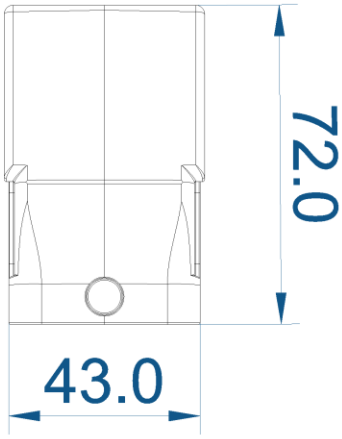

H10B-TH-4B-PG29

4.4.3 RM4 Power Line Definition

Definition of 4-axis power line and brake									
Hole position	1	2	3	4	5	6	7	8	9
definition	U1	V1	W1	U2	V2	W2	U3	V3	W3
Corresponding shaft	S1			S2			S3		
Hole position	10	11	12	13	14	15	16	17	18
definition	U4	V4	W4						
Corresponding shaft	S4								
Hole position	19	20	21	22	23	24	25	26	27
definition									
Compatible with motors									
Hole position	28	29	30	31	32	33	34	35	36
definition		Hug the brake 1+	Hold the brake 2+	Hold the brake 3+	Hold the brake 4+			PE	Hold the brake 1-
Compatible with motors		S1	S2	S3	S4			earthing	S1
Hole position	37	38	39	40	41	42			
definition	Hug brake 2-	Hold the brake 3-	Hug brake 4-			PE			
Compatible with motors	S2	S3	S4			earthing			

4.4.4 RM4 Encoder Line Definition

4-axis encoder line definition											
Hole position	definition	Corresponding shaft	Hole position	definition	Corresponding shaft	Hole position	definition	Corresponding shaft	Hole position	definition	Corresponding shaft
4	1_0V	S1	8	2_0V	S2	12	3_0V	S3	16	4_0V	S4
3	1_5V		7	2_5V		11	3_5V		15	4_5V	
2	1_D-		6	2_D-		10	3_D-		14	4_D-	
1	1_D+		5	2_D+		9	3_D+		13	4_D+	

4.4.5 R6 Power Line Definition

Definition of 6-axis power line and brake									
Hole position	1	2	3	4	5	6	7	8	9
definition	U1	V1	W1	U2	V2	W2	U3	V3	W3
Corresponding shaft		S1			S2			S3	
Hole position	10	11	12	13	14	15	16	17	18
definition	U4	V4	W4	U5	V5	W5	U6	V6	W6
Corresponding shaft		S4			S5			S6	
Hole position	19	20	21	22	23	24	25	26	27
definition									
Corresponding shaft									
Hole position	28	29	30	31	32	33	34	35	36
definition		Hug the brake 1+	Hold the brake 2+	Hold the brake 3+	Hold the brake 4+	Hold the brake 5+	Hold the brake 6+	PE	Hold the brake 1-
Corresponding shaft		S1	S2	S3	S4	S5	S6	earthing	S1
Hole position	37	38	39	40	41	42			
definition	Hug brake 2-	Hold the brake 3-	Hug brake 4-	Hold the brake 5-	Hug brake 6-	PE			
Corresponding shaft	S2	S3	S4	S5	S6	earthing			

4.4.6 R6 Encoder Line Definition

6-axis encoder line definition								
Hole position	definition	Corresponding shaft	Hole position	definition	Corresponding shaft	Hole position	definition	Corresponding shaft
4	1_0V	S1	8	2_0V	S2	12	3_0V	S3
3	1_5V		7	2_5V		11	3_5V	
2	1_D-		6	2_D-		10	3_D-	
1	1_D+		5	2_D+		9	3_D+	
Hole position	definition	Corresponding shaft	Hole position	definition	Corresponding shaft	Hole position	definition	Corresponding shaft
16	4_0V	S4	20	5_0V	S5	24	6_0V	S6
15	4_5V		19	5_5V		23	6_5V	
14	4_D-		18	5_D-		22	6_D-	
13	4_D+		17	5_D+		21	6_D+	

4.4.7 The 6-axis cabinet is defined as the power line used for the 5-axis use

Definition of 6-axis power line and brake									
Hole	1	2	3	4	5	6	7	8	9

position									
definition	U1	V1	W1	U2	V2	W2	U3	V3	W3
Corresponding shaft	S1			S2			S3		
Hole position	10	11	12	13	14	15	16	17	18
definition	U4	V4	W4	U5	V5	W5			
Corresponding shaft	S4			S5					
Hole position	19	20	21	22	23	24	25	26	27
definition									
Corresponding shaft									
Hole position	28	29	30	31	32	33	34	35	36
definition		Hug the brake 1+	Hold the brake 2+	Hold the brake 3+	Hold the brake 4+	Hold the brake 5+		PE	Hold the brake 1-
Corresponding shaft		S1	S2	S3	S4	S5		earthing	S1
Hole position	37	38	39	40	41	42			
definition	Hug brake 2-	Hold the brake 3-	Hug brake 4-	Hold the brake 5-		PE			
Corresponding shaft	S2	S3	S4	S5		earthing			

4.4.8 The encoder line defined for the 6-axis cabinet to do the 5-axis use

5-axis encoder line definition								
Hole position	definition	Corresponding shaft	Hole position	definition	Corresponding shaft	Hole position	definition	Corresponding shaft
4	1_0V	S1	8	2_0V	S2	12	3_0V	S3
3	1_5V		7	2_5V		11	3_5V	
2	1_D-		6	2_D-		10	3_D-	
1	1_D+		5	2_D+		9	3_D+	
Hole position	definition	Corresponding shaft	Hole position	definition	Corresponding shaft			
16	4_0V	S4	20	5_0V	S5			
15	4_5V		19	5_5V				
14	4_D-		18	5_D-				
13	4_D+		17	5_D+				

4.4.11 Servo motor power line definition

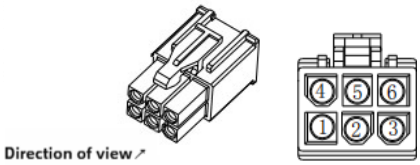

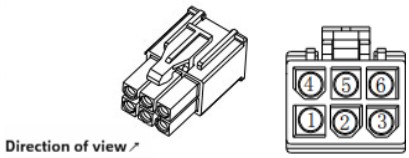

Plug: MOLEX-50361672 Plug: MOLEX-39000059						
Needle	1	2	4	5	3	6
definition	U	V	W	PE Earth	NC null	NC null
color	red	blue	black	Yellow green		
Motor power line below 750W - no brakes						

Plug: MOLEX-50361672 Plug: MOLEX-39000059						
Needle	1	2	4	5	3	6
definition	U	V	W	PE Earth	BR brakes	BR brakes
color	red	blue	black	Yellow green	palm tree	white
Motor power line above 750W - no brakes						

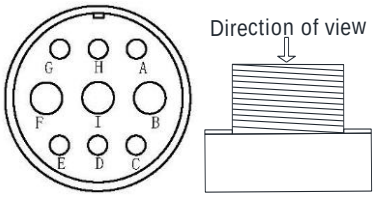

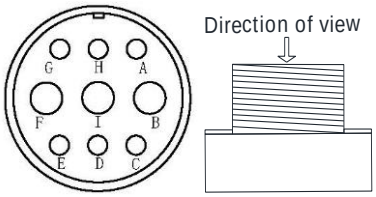

Socket type		MS3102A 20-18P/9 cores		
Needle	B	I	F	G
definition	U	V	W	FG Earth
Motor power line above 850W - without brakes				

Socket type		MS3102A 20-18P/9 cores				
Needle	B	I	F	G	C	E
definition	U	V	W	FG Earth	Brake+	brake car-
Motor power line above 850W - with brake						

4.4.12 Servo motor encoder line definition

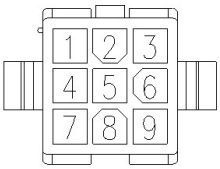

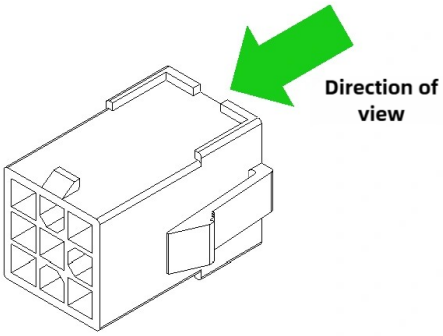

Motor encoder AMP-TE/female terminal/ 170361 -1									
Pin number	1	2	3	4	5	6	7	8	9
Signal description	Battery +		Signal +	Battery-		Signal	Shielding	0V	5V

Host encoder DB9 interface		Motor Encoder AMP-TE/Female Terminal/170361-1	
Pin number	Signal description	Pin number	Signal description
8	SD+	3	SD+
4	SD-	6	SD-
9	5V	9	5V
5	0V	8	0V
		7	FG
		1	Battery+
		4	Battery-
*Note: 95, 84 twisted pairs			
Motor encoder line below 750W			

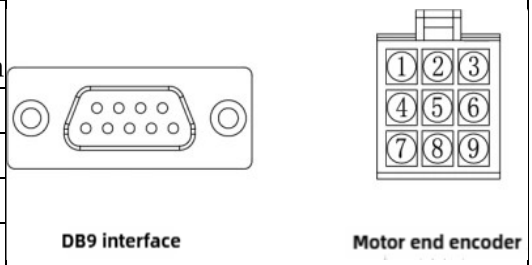

Host encoder DB9 interface		Motor encoder 15-core aviation head interface	
Pin number	Signal definition	Pin number	definition
8	Signal +	A	SD+
4	Signal-	B	SD-
9	5V	E	Battery+
5	0V	F	Battery-
		G	5V
		H	0V
		J	FG
*Note: 95, 84 twisted pairs			
Motor encoder line above 850W			

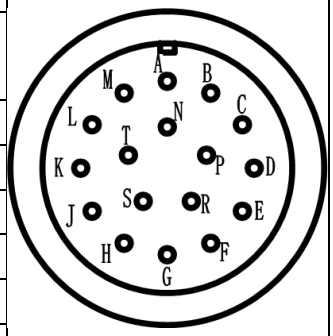

4.4.13 Communication port definition

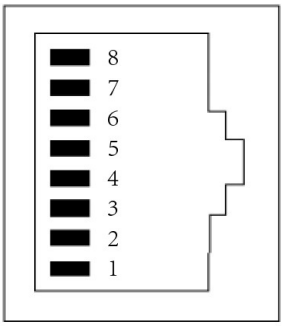

Abz encoder

Abz encoder signal definition	
1#	A-
2#	A+
3#	Z-
4#	B-
5#	B+
6#	Z+
7#	0V-ISO
8#	5V-ISO

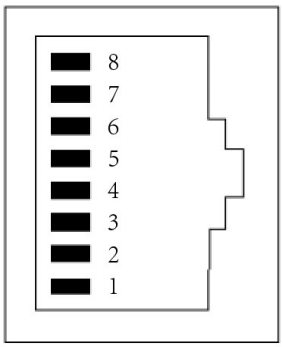

Stepping 1

Stepping 1 port signal definition	
1#	N-
2#	N+
3#	SVALRM
4#	P-
5#	P+
6#	SVSON
7#	24V
8#	0V

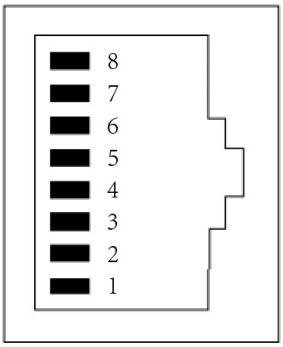

485&CAN

485&can signal definition	
1#	CANL
2#	CANH
3#	0V-ISO
4#	485-1A
5#	485-1B
6#	GND
7#	485-2A
8#	485-2B

4.4.14 The size of the heavy-duty head and the opening size of the base panel

Female insert

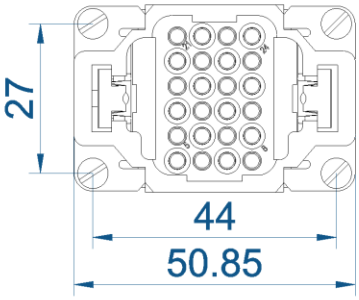

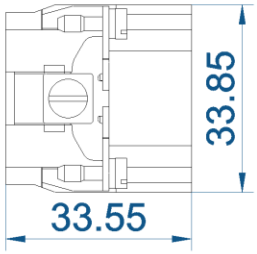

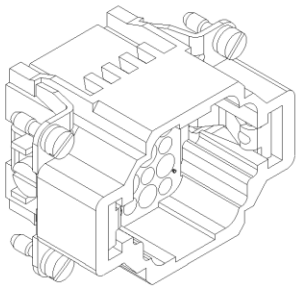

Male insert

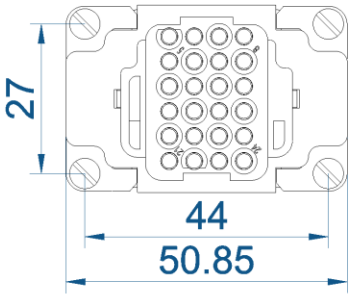

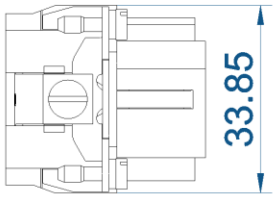

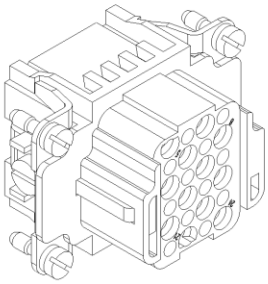

Encoder upper shell

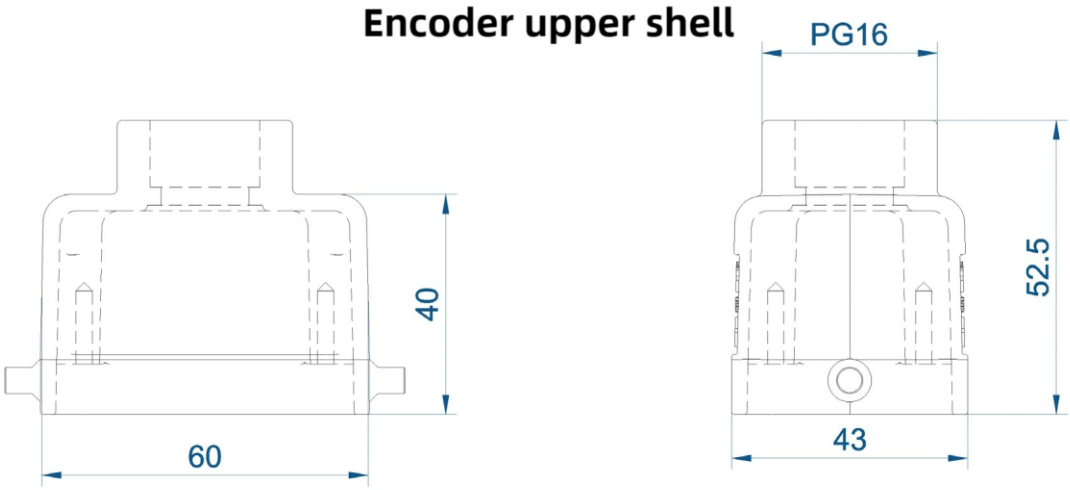

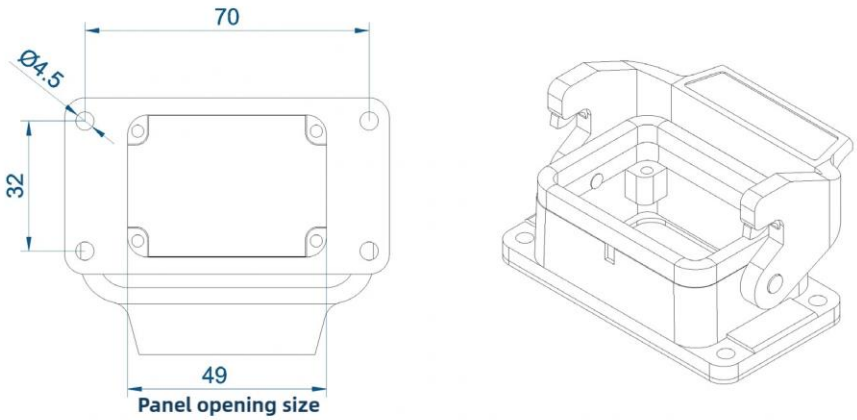

Encoder base

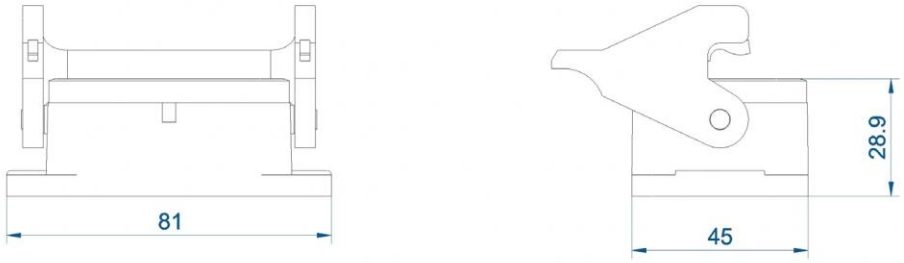

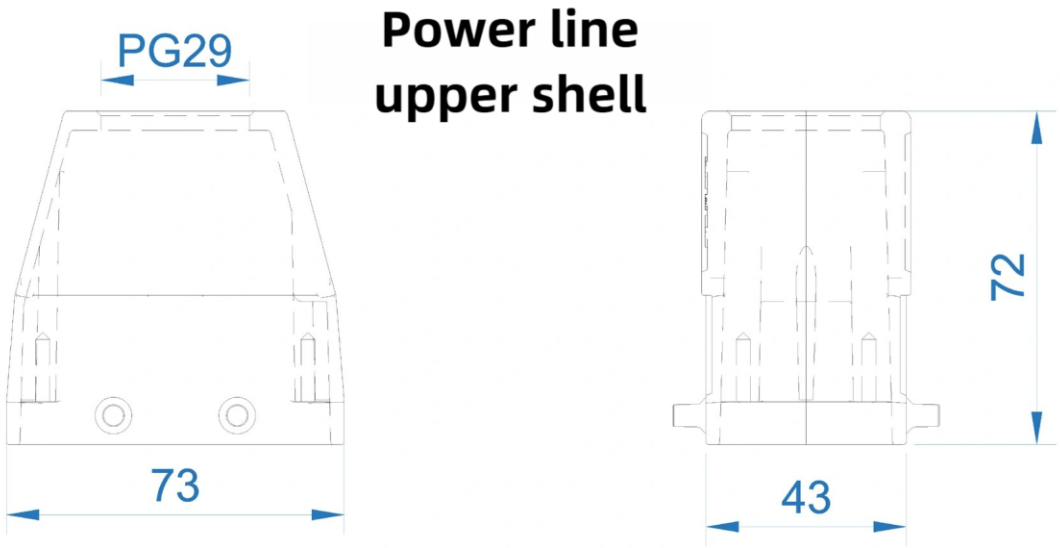

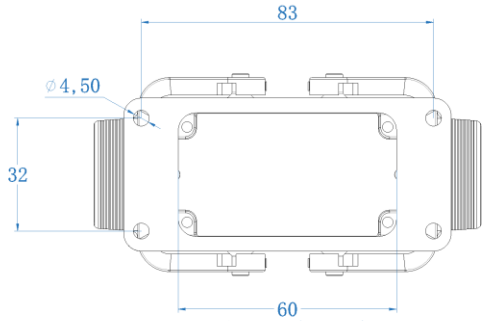

Panel opening size

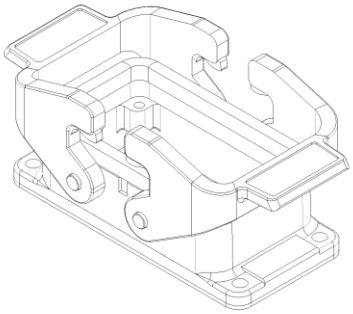

Power line base

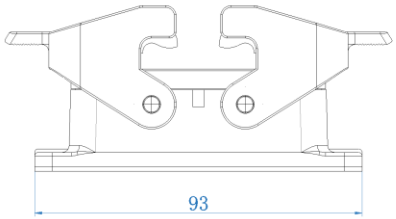

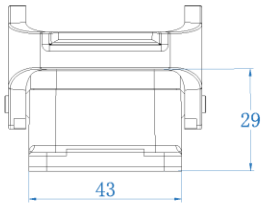

Shielded and twisted pair to meet signal transmission requirements

4.5 Tool Recommendation

4.5.1 Crimping pliers

How to use:

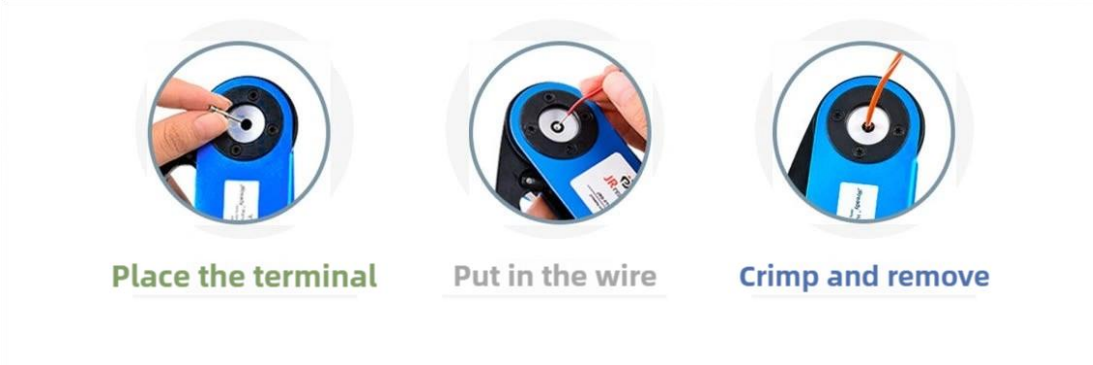

4.5.2 Needle extractor recommendation

Model	TL00	Support tube outer diameter	3.0mm
Material	Mold steel	The inner diameter of the support tube	2.6mm
Weight	37.6g	Support tube length	22.5mm
Size	Length 127.3811.02(mm)		

Adaptable terminal: suitable for 10A cold pressing pin

HARTING (Hao Ting, Ha Ding) connectors: HAN D, HAN DD, HAN Q series

Wei En connector: HD HDD HM HK HQ series

TE connector: Hd HDD series

How to use:

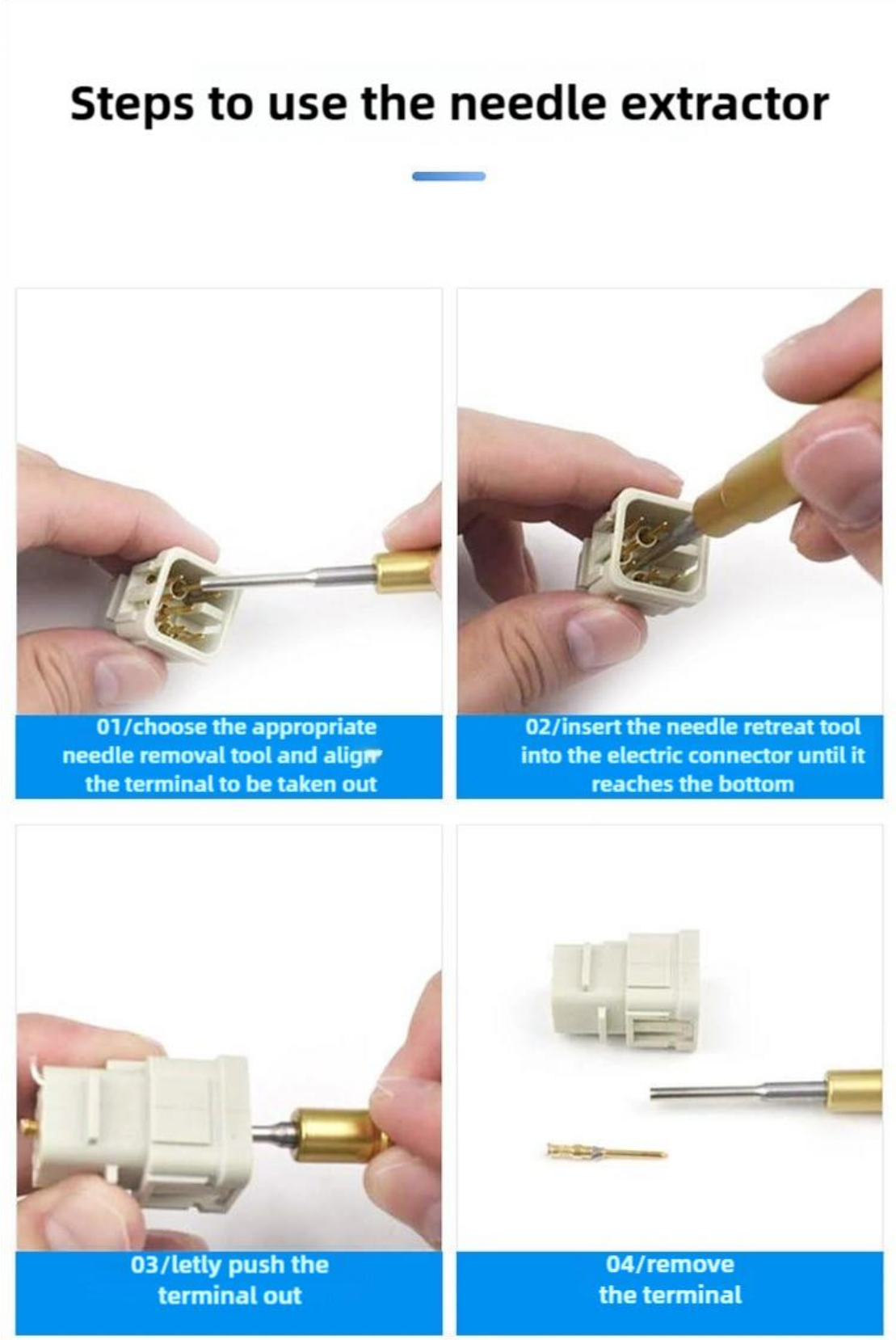
Steps to use the needle extractor
01/choose the appropriate needle removal tool and align the terminal to be taken out
02/insert the needle retreat tool into the electric connector until it reaches the bottom
03/letly push the terminal out
04/remove the terminal

Principle of needle extractor

Principles of needle extractor

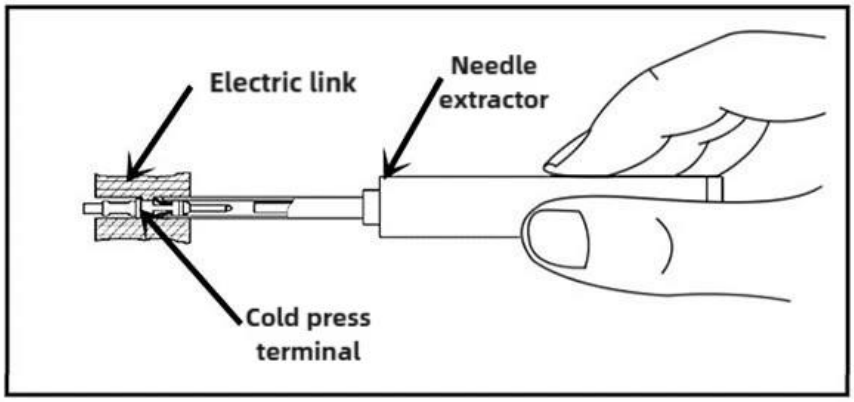

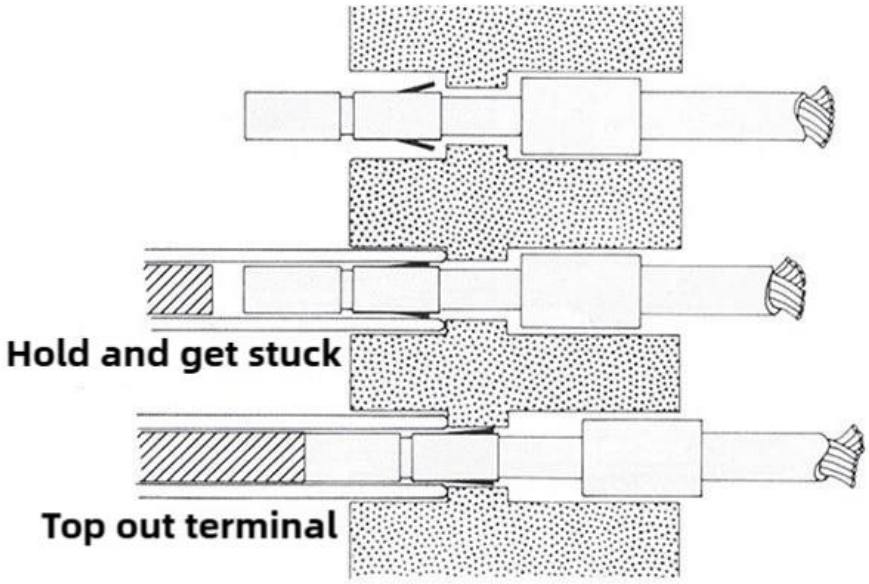

4.6 Schematic connection of the connection

This product is optionally equipped with an encoder cable and power cable with the robot body, please connect it according to the figure below.

The encoder and power line connecting the mechanical body and the electric control cabinet have a connection mark, please connect the cable according to the identification, do not connect the wrong one, so as not to cause damage, resulting in the robot system can not work normally, and may also cause serious safety problems.

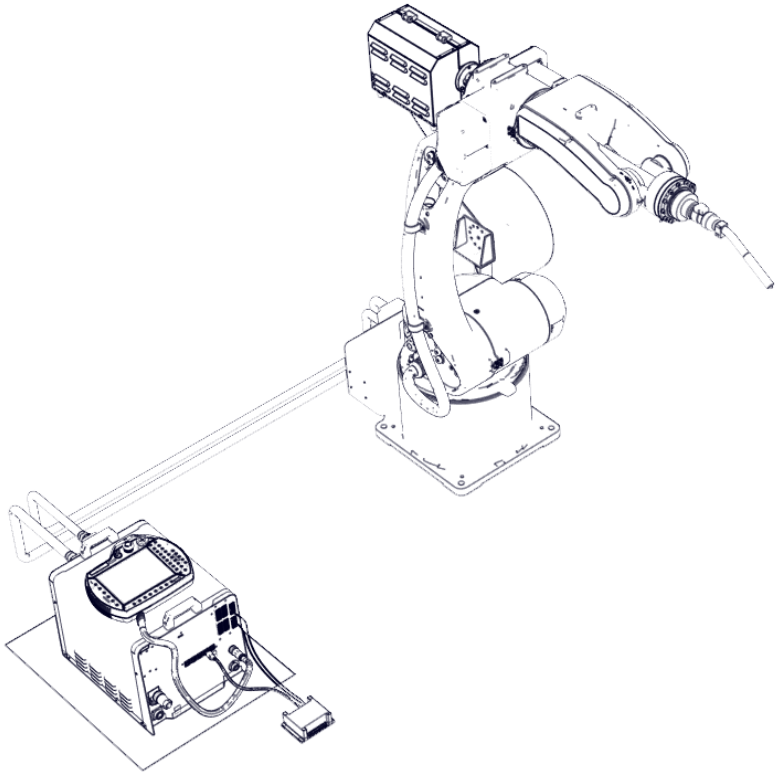

The robot is connected to the control cabinet

5. Connect the input IO

5.1 Input port specifications

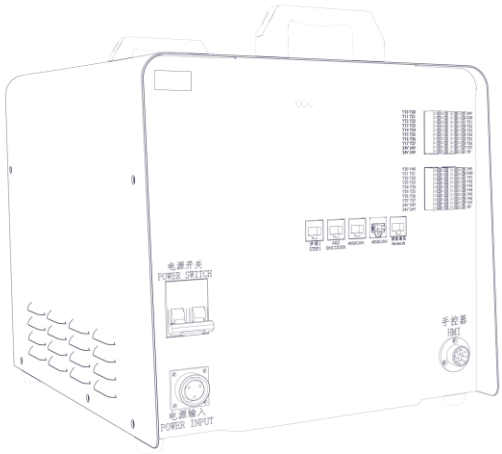

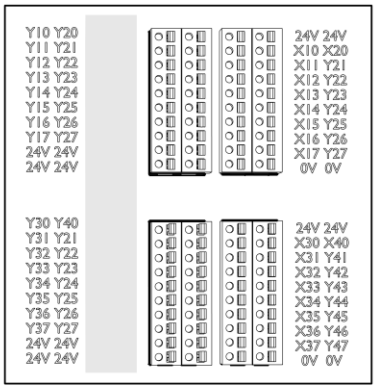

project	specification
Enter the number of channels	32
Enter the connection method	Crimp-type terminal blocks
Enter the type	Optoelectronic coupling
Maximum input voltage	30VDC
Input current	10mA
Input impedance	>2KΩ
ON voltage range	>9.8V
OFF voltage range	<9.8
Enter the maximum signal frequency	1KHZ
Isolation method	Opto-coupling isolation

5.2 Enter the IO interface definition

definition	I/O number	name
X10	X010	Normal input 1
X11	X011	Normal input 2
X12	X012	Normal input 3
X13	X013	Normal input 4
X14	X014	Normal input 5
X15	X015	Normal input 6
X16	X016	Normal input 7
X17	X017	Normal input 8
X20	X020	Normal input 9
X21	X021	Normal input 10
X22	X022	Normal input 11
X23	X023	Normal input 12
X24	X024	Normal input 13
X25	X025	Normal input 14
X26	X026	Normal input 15
X27	X027	Normal input 16
X30	X030	Normal input 17
X31	X031	Normal input 18
X32	X032	Normal input 19
X33	X033	Normal input 20
X34	X034	Normal input 21
X35	X035	Normal input 22
X36	X036	Normal input 23
X37	X037	Normal input 24
X40	X040	Normal input 25
X41	X041	Normal input 26
X42	X042	Normal input 27
X43	X043	Normal input 28
X44	X044	Normal entry 29
X44	X044	Normal input 30
X46	X046	Normal input 31
X47	X047	Normal input 32
24V	Power+	Output 24V
0V	Power supply-	Output 0V

5.3 Wiring steps

Indicates that the control output low level is NPN type.
Wiring schematic

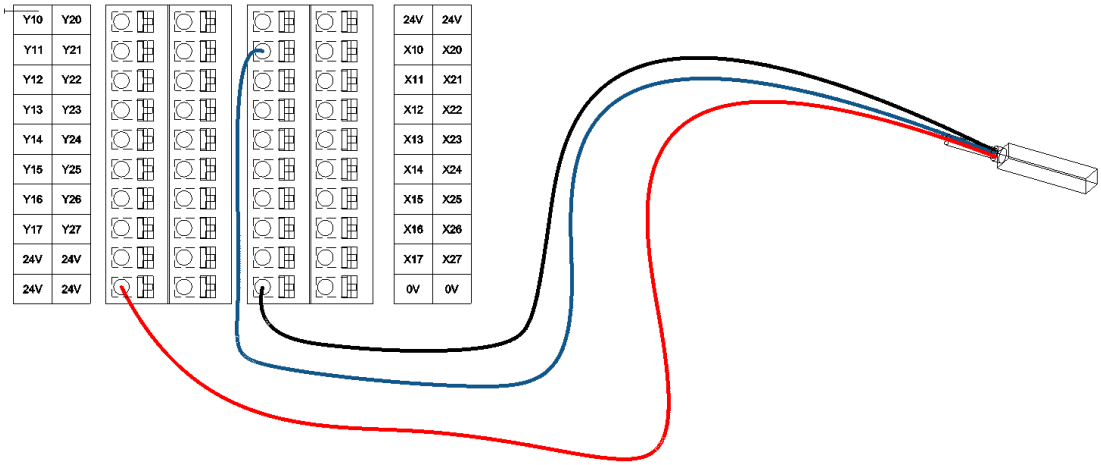

Connect a three-wire NPN type magnetic switch

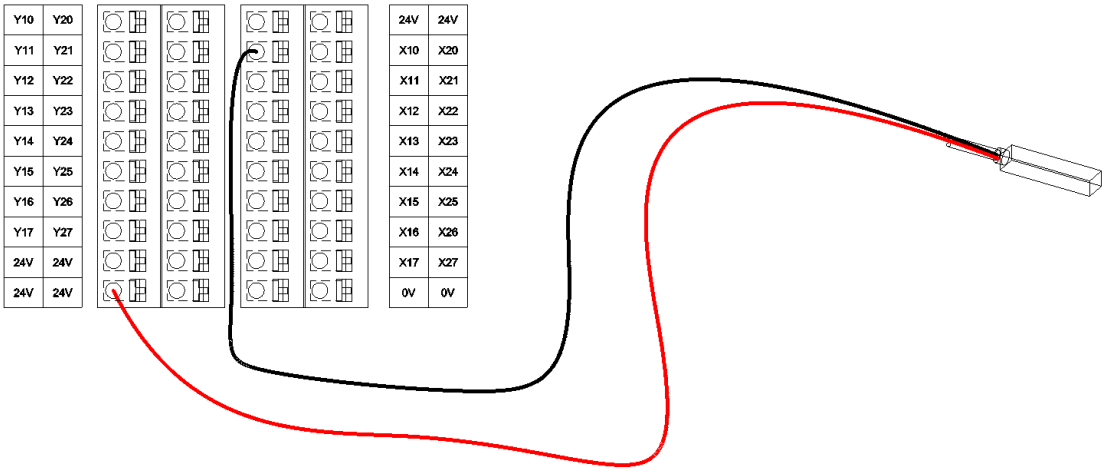

Connects a two-wire NPN type magnetic switch

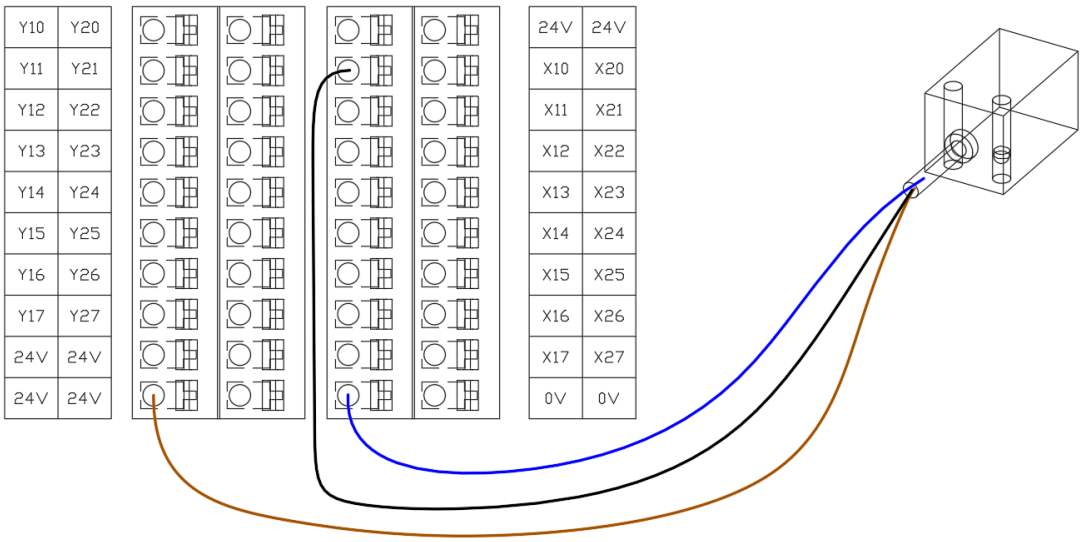

Connect the three-wire NPN proximity switch

5.4 Connect the output IO

5.4.1 Output Port Specifications

project	specification
Number of output channels	32
Output connection mode	Crimp-type terminal blocks
Output type (access mode).	Leaky type (NPN).
Maximum drive current for a single channel	350mA
Maximum output switching frequency	1KHZ
Isolation method	Opto-coupling isolation
Protection features	Current limit protection

5.4.2 Output IO definition interface

definition	I/O number	name
Y10	Y010	green light
Y11	Y011	Yellow light
Y12	Y012	red light
Y13	Y013	Alarm sound
Y14	Y014	Normal output 5
Y15	Y015	Normal output 6
Y16	Y016	Normal output 7
Y17	Y017	Normal output 8
Y20	Y020	Normal output 9
Y21	Y021	Normal output 10
Y22	Y022	Normal output 11
Y23	Y023	Normal output 12
Y24	Y024	Normal output 13
Y25	Y025	Normal output 14
Y26	Y026	Normal output 15
Y27	Y027	Normal output 16
Y30	Y030	Normal output 17
Y31	Y031	Normal output 18
Y32	Y032	Normal output 19
Y33	Y033	Normal output 20
Y34	Y034	Normal output 21
Y35	Y035	Normal output 22
Y36	Y036	Normal output 23
Y37	Y037	Normal output 24
Y40	Y040	Normal output 25
Y41	Y041	Normal output 26

Y42	Y042	Normal output 27
Y43	Y043	Normal output 28
Y44	Y044	Normal output 29
Y44	Y044	Normal output 30
Y46	Y046	Normal output 31
Y47	Y047	Normal output 32
24V	Power+	Output 24V
0V	Power supply-	Output 0V

5.4.3 Wiring steps

It is forbidden to short the output Y010-Y047 directly to +24V;

- 24V power supply in the cabinet

Wiring example

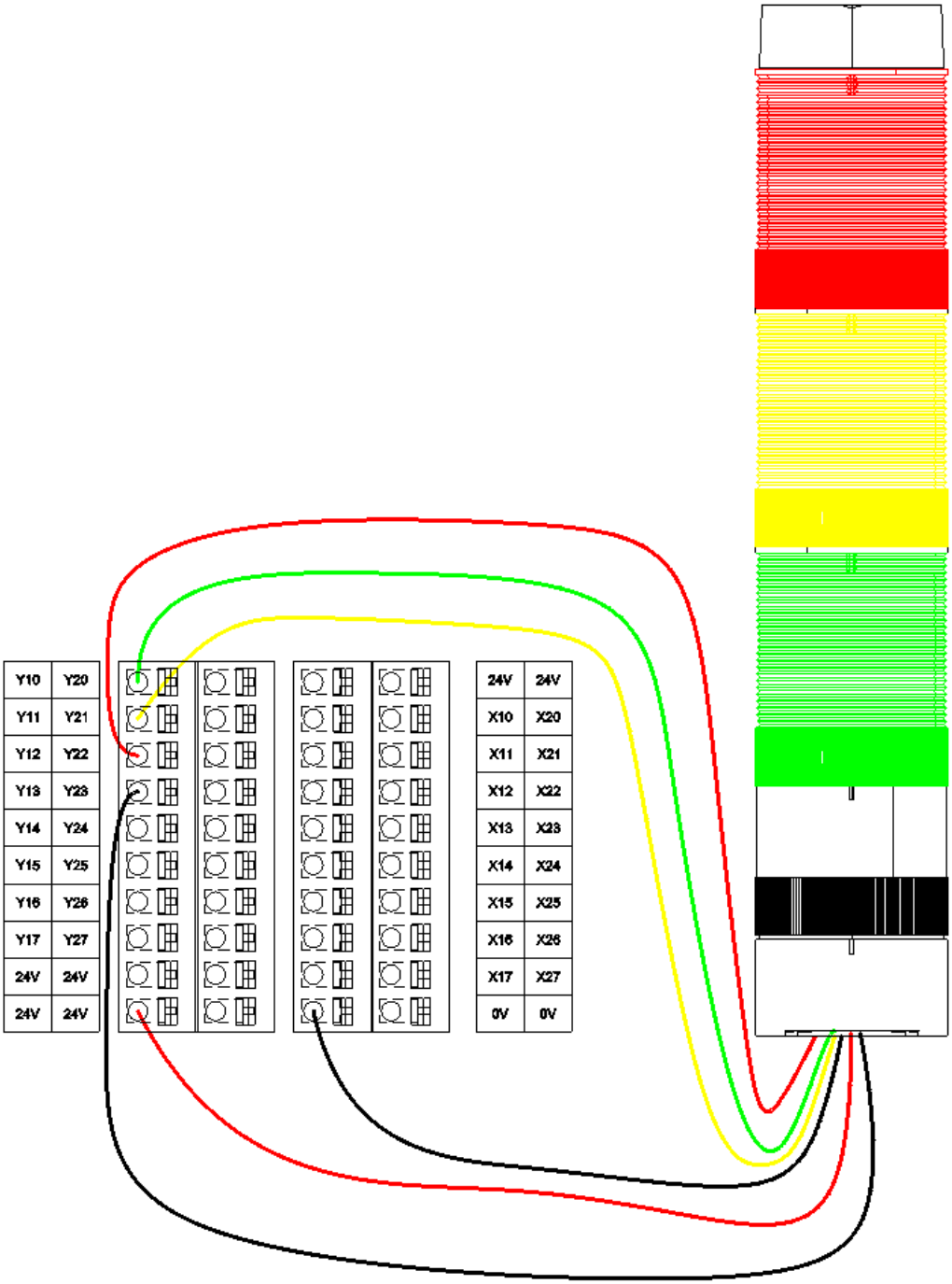

Connect the 24V tri-color light

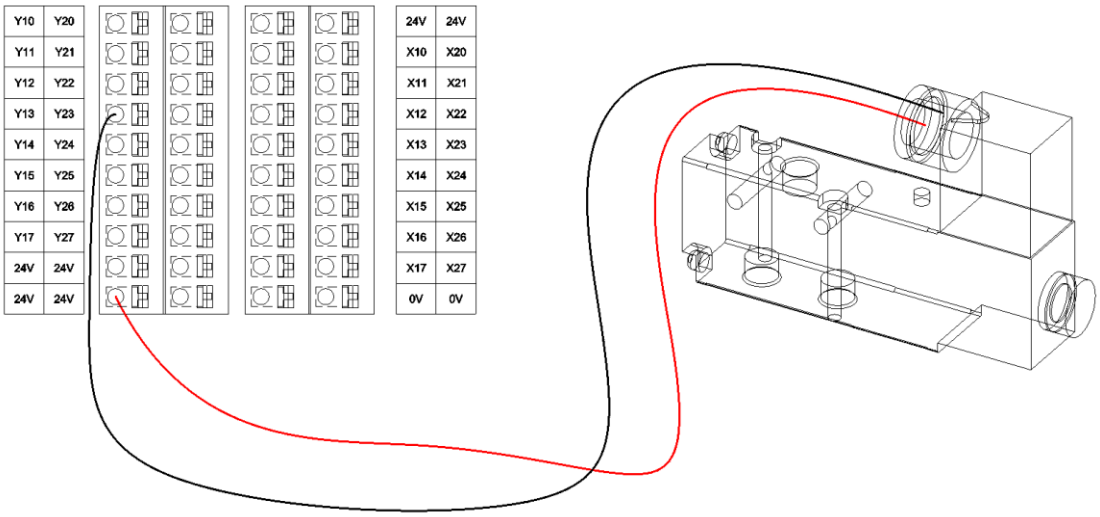

Connect the solenoid valve

illustrate

When this product uses an inductive load, the inductive load will generate a large reverse electromotive force between the contacts when it stops, and produce arc discharge, which may lead to contact failure or contact sagging, resulting in a significant shortening of the contact life.

The diode needs to meet:

Reverse voltage: 5~10 times of load voltage;

Forward current: greater than the load current.

note

- In the normal operation of the robot, the use of the emergency stop function should be minimized, the emergency stop may cause the robot shutdown trajectory to deviate from the normal operation trajectory, and the emergency stop impact will reduce the life of the robot reducer and increase the wear of the motor brake pads.
- In daily use, if you want the robot to enter the emergency stop state, please press the emergency stop button when the robot is not moving.

6. Communication port wiring instructions (EtherCAT, EtherNet).

6.1 Introduction to Ethernet communication interface

The EtherCAT interface is used to connect to the external axis, and the Ethernet interface allows the user to connect to the visual network port, where the Ethernet supports TCP/IP protocol.

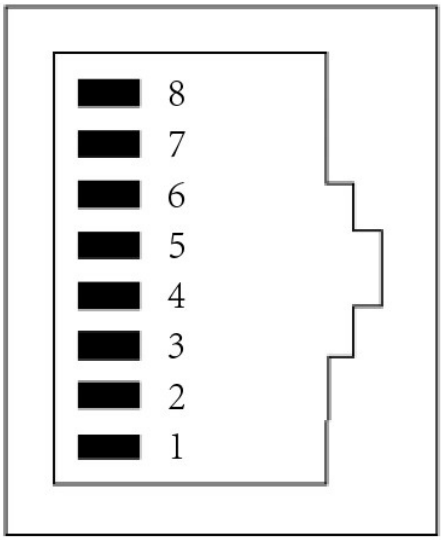

Network

Network port signal definition	
1#	RD+
2#	RD-
3#	TD+
4#	TCT
5#	TCT
6#	TD-
7#	NC
8#	GND

6.2 Ethercat Communication Technical Specifications

Servo communication protocol (inside the system).	EtherCAT protocol
Support Services	CoE（PDO、SDO）
Synchronization mode	DC - Distributed Clock
Physical layer	100 BASE-TX
baud rate	100 Mbit/s (100 Base-TX)
Duplex mode	Full-duplex
Topology	Linear
Transmission medium	Shielded Category 5A or better network cable
EtherCAT frame length	44 bytes ~ 1498 bytes
Process data	A single Ethernet frame has a maximum of 1486 bytes

6.3 Communication cable recommendation

Category5 shielded twisted pair cables are recommended for communication cables (suitable for EtherCAT and Ethernet connections), and highly flexible shielded Category 6 network cables are recommended for harsh EMC environments.

6.4 Introduction to CAN and RS485 interfaces

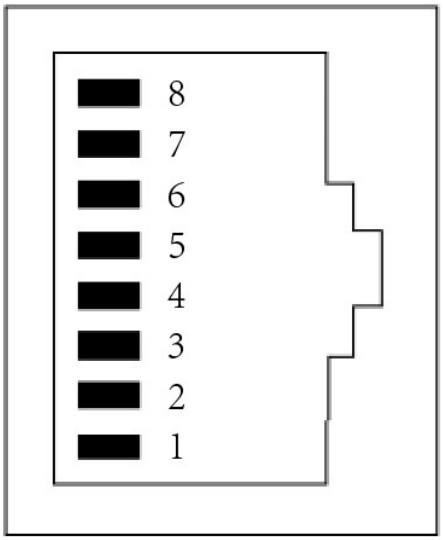

485&CAN

485&can signal definition	
1#	CANL
2#	CANH
3#	0V-ISO
4#	485-1A
5#	485-1B
6#	GND
7#	485-2A
8#	485-2B

6.5 RS485 wiring method

RS485 communication is recommended to use shielded twisted pair connection. RS485+， RS485- are connected by twisted pair cables.

6.6 Crimp the signal line for line guidance

The structure of the thread needle is shown in the following figure:

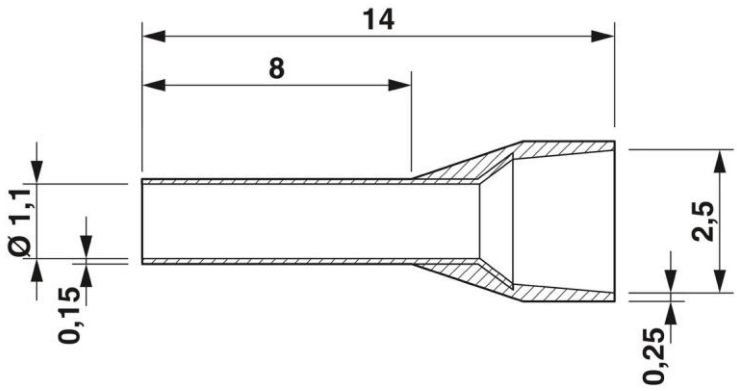

project	Specifications
factory	Phoenix
Model	AI 0,5 - 8 WH - ferrule
Maximum cross-section of flexible wire	0.5 mm²
color	white
material	Silicone- and halogen-free
Surface treatment	Tin plating (galvanizing)

Recommended crimping tool, recommended model: CRIMPFOX 6H - Crimping pliers (Phoenix).

Cable Fabrication Steps:

1. Strip off the wire insulation skin, remove the length of the outer insulation skin 8mm.
2. Thread the cable through the wire size sleeve.
3. Thread the conductor part of the cable through the round hole of the needle and crimp it with the crimping pliers recommended by the needle manufacturer.
4. Insert the wire pin into the corresponding hole of the terminal strip at the IO port, and pull back to confirm that the wire pin is locked with the shrapnel inside the terminal strip.

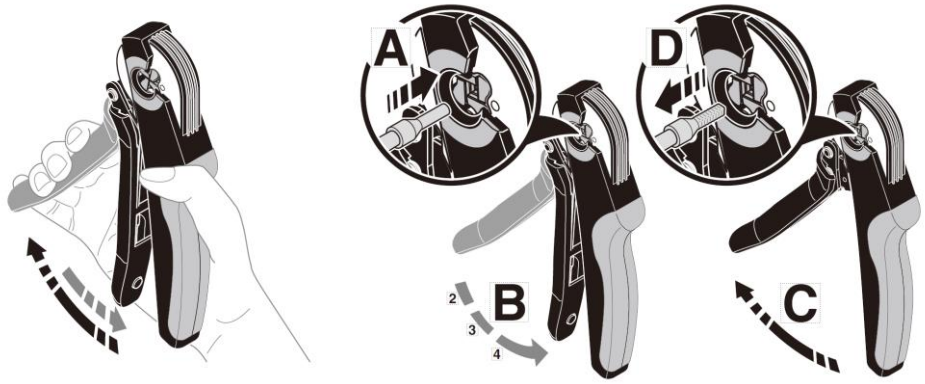

7. Care and maintenance

Maintenance precautions

Before maintenance, please carefully read the "Maintenance Precautions", this manual, and related manuals, and perform maintenance on the basis of a full understanding of the safety maintenance method.
It is important that the maintenance of the robotic system is carried out by personnel trained in safety.
Those who have undergone safety training refer to those who have received safety training for workers engaged in industrial robot-related business as stipulated by the laws and regulations of each country (knowledge of industrial robots, knowledge of operation, teaching, etc., and knowledge related to business operations such as inspections). , relevant laws and regulations, etc.).

dangerous

- It is important that the maintenance of the robotic system is carried out by personnel trained in safety. Before maintenance, be sure to read the "Maintenance Precautions" described in the user manual. If the robot system is operated without understanding the safety observances, it can cause serious injury or significant damage, which is very dangerous.
- Do not disassemble parts not described in this manual, or maintain them in a different way than those described. If disassembly or maintenance is carried out incorrectly, not only will the robot system not function properly, but it can also cause serious safety problems. Do not enter the operating area during the power on. Even if you see that the manipulator seems to have stopped moving, it may still move and can cause serious safety problems, which is very dangerous.
- Untrained personnel should never approach a powered manipulator.

Also, please refrain from entering the operating area. Even if you see that the manipulator seems to have stopped moving, the manipulator in the energized state may still perform unexpectedly and may cause serious safety problems.

- Be sure to check the operation of the robot after replacing the part outside the safety fence. Otherwise, the manipulator before the action confirmation may perform unexpected movements and may cause serious safety problems.
- Before entering normal operation, please confirm that the emergency stop switch and safety door switch are operating normally. If the switch is operated in a state where it cannot operate properly, it will not be able to perform its safety function in the event of an emergency, and it may cause serious injury or serious damage, which is very dangerous.

note

- Do not open the lid of the control cabinet except during maintenance work. There is a high-voltage charging area inside the control cabinet, and there is a risk of electric shock even when the power supply is off.
- Be sure to turn off the power supply to the control cabinet and related devices and unplug the power supply before replacing it. If the operation is carried out in a power-on state, it may cause electric shock or malfunction.
- Do not attach or remove the servo motor connector while keeping the power on. Otherwise, it may cause the manipulator to perform abnormal movements, which is very dangerous. In addition, if the operation is carried out with the power on, it may cause electric shock or malfunction.
- Ensure safety by unplugging the mains. Be sure to connect the AC power cable to the power plug and not directly to the factory power supply, etc.
- Overhaul, repair and maintenance operations must be carried out in the state of power. At this point, work in pairs. One of them is in a position where he can immediately press the emergency stop button, while the other is within the robot's range of movement, keeping his vigilance and moving quickly to work. In addition, it is necessary to confirm the evacuation route before proceeding.

warn

- It is forbidden to disassemble and work on parts not covered by the maintenance manual.

- Maintenance personnel must keep the robot key, and it is strictly forbidden for unauthorized personnel to enter the robot software system in manual mode and read or modify the program and parameters at will.

Daily check-ups

Due to the influence of environmental temperature, humidity, dust and vibration, it will cause the device to deteriorate and reduce the service life of the product. Therefore, it is necessary to carry out daily and regular maintenance and maintenance, especially for high-temperature environments, frequent start-stop occasions, environments with AC power supply and load fluctuations, environments with large vibrations or shocks, and dustIn corrosive environments with hydrochloric acid, the interval between periodic inspections should be shortened. In order to ensure that the product functions properly and that the product is not damaged, please check the following items every day, make a copy of the inspection confirmation form for use, and sign the "confirm" seal on the confirmation column after each confirmation.

Check the items	Check the contents	Countermeasures in case of malfunction	Confirmation bar
Installation environment	Whether the control cabinet and surrounding cables are abnormal	Confirm whether there is vibration in the installation of the fixing bracket; Verify that the connecting cable terminals are not loose or corroded.	
Input voltage	Enter the supply voltage	Confirm whether the input voltage is within the allowable range; Confirm that there is no heavy load around to start.	
Terminal	Control cabinet connection terminals	Confirm that the screws on both sides of the input and output terminals are tightened.	

Regular check-ups

Please regularly inspect the places that are difficult to inspect during operation, and always keep the control cabinet in a clean state to effectively remove dust on the surface of the product and prevent dust from entering the product, especially metal dust.

Check the items	Check the contents	Countermeasures in case of malfunction	1 month check-up
Cable	whether the power line and the connection are discolored; Whether the insulation is aged or cracked.	Replace cracked cables; Replace the connection terminal that has been damaged.	
Air duct vents	whether the air duct and heat sink are blocked; The fan is	Cleaning air ducts; Replace the fan.	

	damaged		

HUACHENG

工业控制领域核心供应商

深圳市华成工业控制股份有限公司
Shenzhen Huacheng industrial control Co.,LTD
0755-26417678/27470348
传真：(86)075526416578
官网：http://www.hc-system.com
微信公众号
地址：深圳市宝安区西乡街道固戍一路正奇隆大厦8楼